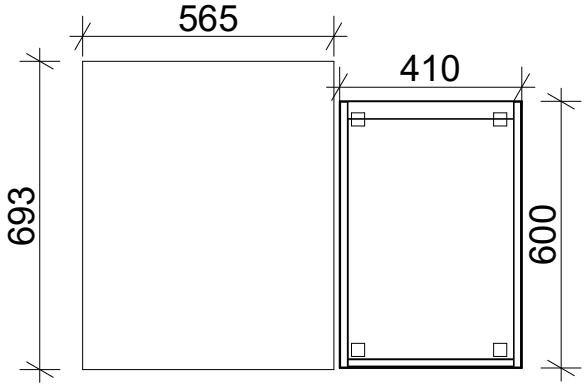
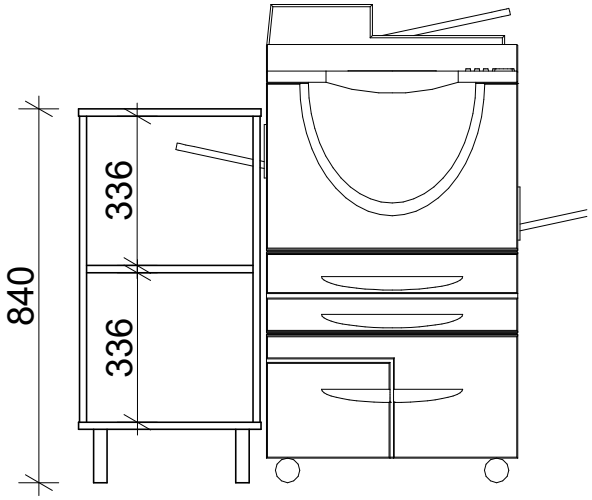
22